By Freddy Chen & Dr. Liwu Wang; June 2025

AEM Innovation to Power Your Vision

RoHS COMPLIANT HALOGEN FREE cULus

AEM COMPONENTS

AEM CMF Series High Current SMD Fuse

Single Fuse Solution For Datacenters And Cloud Infrastructure Application



AEM CMF series SMD fuse are available for data center to make the circuit reliable, energy-efficient, and secure. CMF series fuse provide single fuse solution for overcurrent protection. AEM provides data center solutions for computing devise, networks , data ports , and uninterruptible power supplies.





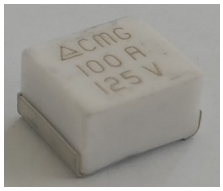

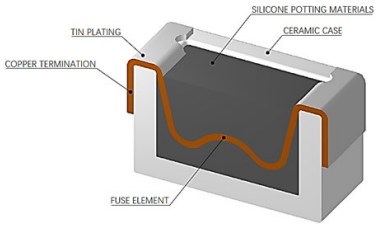

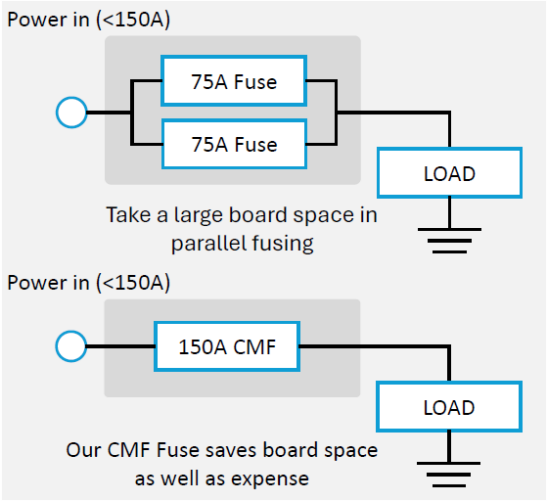

Applications

- Energy storage
- Power distribution units
- AI
- Data center
- Server and cloud systems

Data Sheet

Contact Us

AEM CMF Series High Current SMD Fuse

Features:

- Thermal simulation is utilized on the critical fuse element design for optimal performance and best-in-class electrical characteristics.
- Standardized footprint / miniaturized package for current rating from 50A to 200A.
- 100% interconnection reliability with a single piece of metal functioning as a fuse link and surface mount.
- Best-in-class low DC resistance (DCR) - Optimizes thermal management and minimizes excessive power loss.
- High interrupting ratings – for excellent inrush current capability

Benefits:

- Save space by using a single fuse rather than multiple fuses in parallel.
- Integrated ceramic molding, no burrs, cracks
- Safe and firm robust structure
- Compact size with high power density
- Eliminate burning and explosion at high voltage/current conditions
- Surface mountable for platform design

HIGH-POWER FUSE PROTECTION FOR CIRCUIT SATEY



Why choose AEM CMF Series fuses?

- The compact CMF Series fuses provide a single fuse solution for this compact application.
- Superior reliable and safe protection with high inrush current withstanding capability

About Us

As a high-tech enterprise specializing in the research and manufacturing of ceramic electronic components, AEM is committed to providing zero failure safety guarantees for EV and high-end electronic devices with advanced circuit protection standards, and jointly building a sustainable electronic component ecosystem.

Application Example

