By Freddy Chen & Dr. Liwu Wang; June 2025

AEM Innovation to Power Your Vision

RoHS COMPLIANT HALOGEN FREE c UL us

AEM COMPONENTS

AEM CMF Series High Current SMD Fuse



AEM CMF series SMD fuse are available for power tooling to make the circuit reliable, energy-efficient, and secure. CMF series fuse provide single fuse solution for overcurrent protection. AEM provides power tooling solutions for battery protection , motor driver protection and mower block diagram protection .



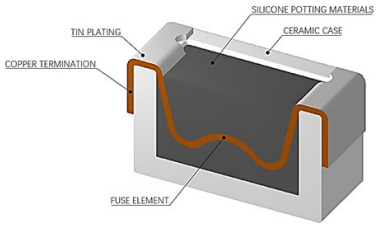

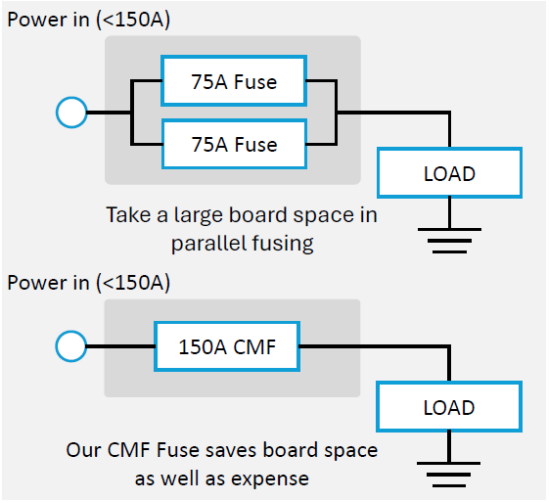

Applications

- Power tools
- Cutting tools
- Mowers
- Data center
- Cleaning Robots

Data Sheet

Contact Us

By Freddy Chen & Dr. Liwu Wang; June 2025

AEM CMF Series High Current SMD Fuse

Features:

- Thermal simulation is utilized on the critical fuse element design for optimal performance and best-in-class electrical characteristics.
- Standardized footprint / miniaturized package for current rating from 50A to 200A.
- 100% interconnection reliability with a single piece of metal functioning as a fuse link and surface mount.
- Best-in-class low DC resistance (DCR) - Optimizes thermal management and minimizes excessive power loss.
- High interrupting ratings – for excellent inrush current capability

Benefits:

- Save space by using a single fuse rather than multiple fuses in parallel.
- Integrated ceramic molding, no burrs, cracks
- Safe and firm robust structure
- Compact size with high power density
- Eliminate burning and explosion at high voltage/current conditions
- Surface mountable for platform design

HIGH-POWER FUSE PROTECTION FOR CIRCUIT SATEY



Why choose AEM CMF Series fuses?

- The compact CMF Series fuses provide a single fuse solution for this compact application.
- Superior reliable and safe protection with high inrush current withstanding capability

About Us

As a high-tech enterprise specializing in the research and manufacturing of ceramic electronic components, AEM is committed to providing zero failure safety guarantees for EV and high-end electronic devices with advanced circuit protection standards, and jointly building a sustainable electronic component ecosystem.

Application Example

